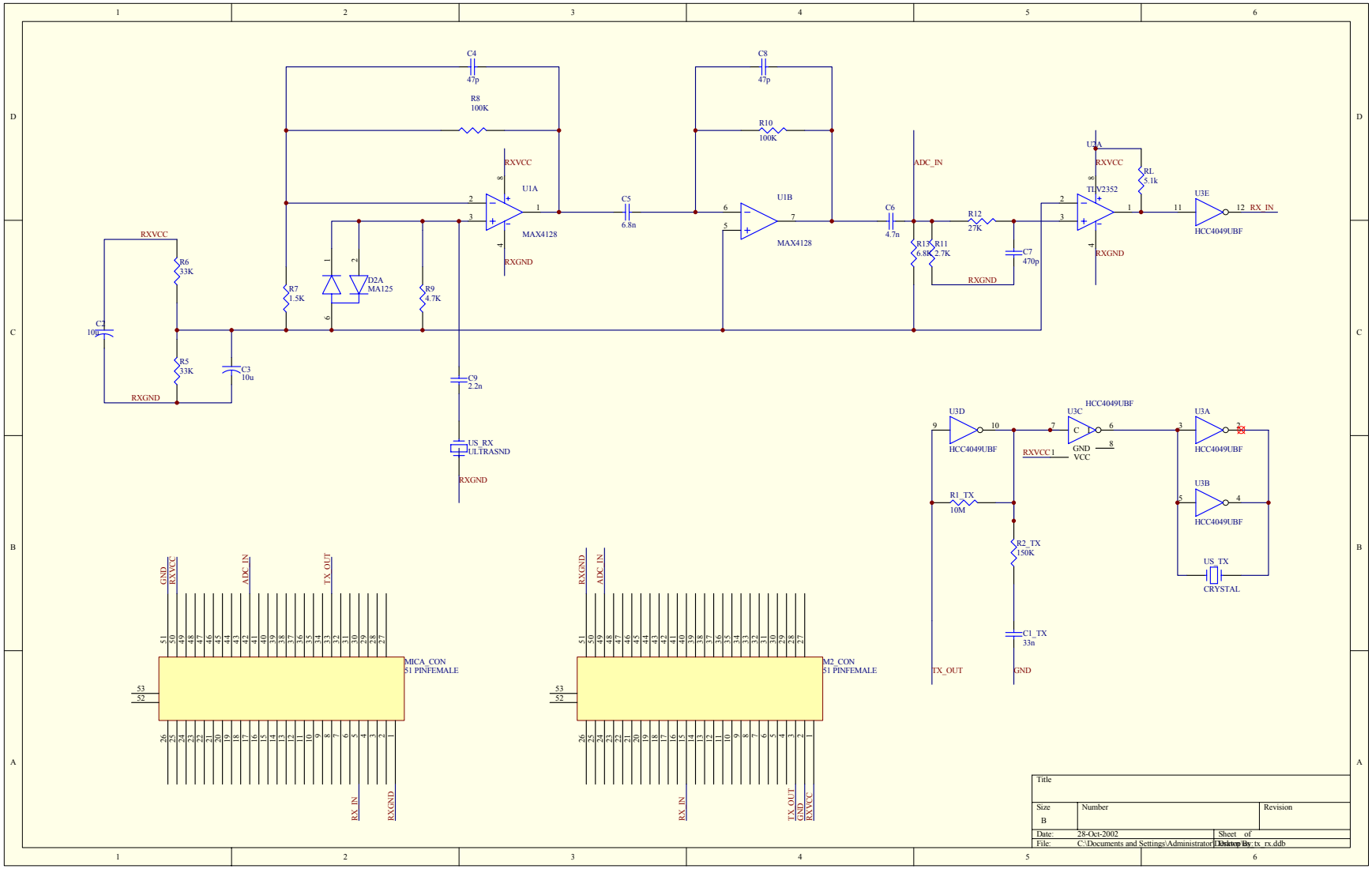
C4
47p
R8
100K
C8
47p
R10
100K
RXVCC
U1A
MAX4128
RXGND
C5
6.8n
U1B
MAX4128
C6
4.7n
ADC_IN
R12
27K
R13
6.8K
R11
2.7K
C7
470p
U2A
TLV2352
RL
5.1k
U3E
HCC4049UBF
12 RX_IN
R6
33K
R5
33K
C2
10p
C3
10u
R7
1.5K
D2A
MA125
R9
4.7K
C9
2.2n
US_RX
ULTRASND
U3D
HCC4049UBF
U3C
HCC4049UBF
GND
VCC
U3A
HCC4049UBF
U3B
HCC4049UBF
R1_TX
10M
R2_TX
150K
C1_TX
33n
US_TX
CRYSTAL
TX_OUT
GND
MICA_CON
51 PINFEMALE
M2_CON
51 PINFEMALE
Title
Size
B
Number
Revision
Date: 28-Oct-2002
Sheet of
File: C:\Documents and Settings\Administrator\Desktop\tx_rx.ddb
Drawn By: